Radial insert ball bearing

UK200 Series-UK211+HS2311

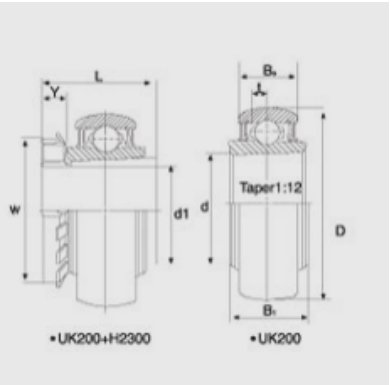

Bearing No.	**UK211+HS2311**
d1	
(in.)	1 7/8
(mm)	50
Dimensions（mm）	
D	100
L	59
d	55
Bi	37
Be	25
T	7
Y	12
W	75
Basic Load Rating (kN)	
Dynamic	4350
Static	2900

Luoyang Auto Bearing Co.,Ltd-Tel:0598-3607100-Email:moore@lyautobearing.com-http://www.auto-bearing.com